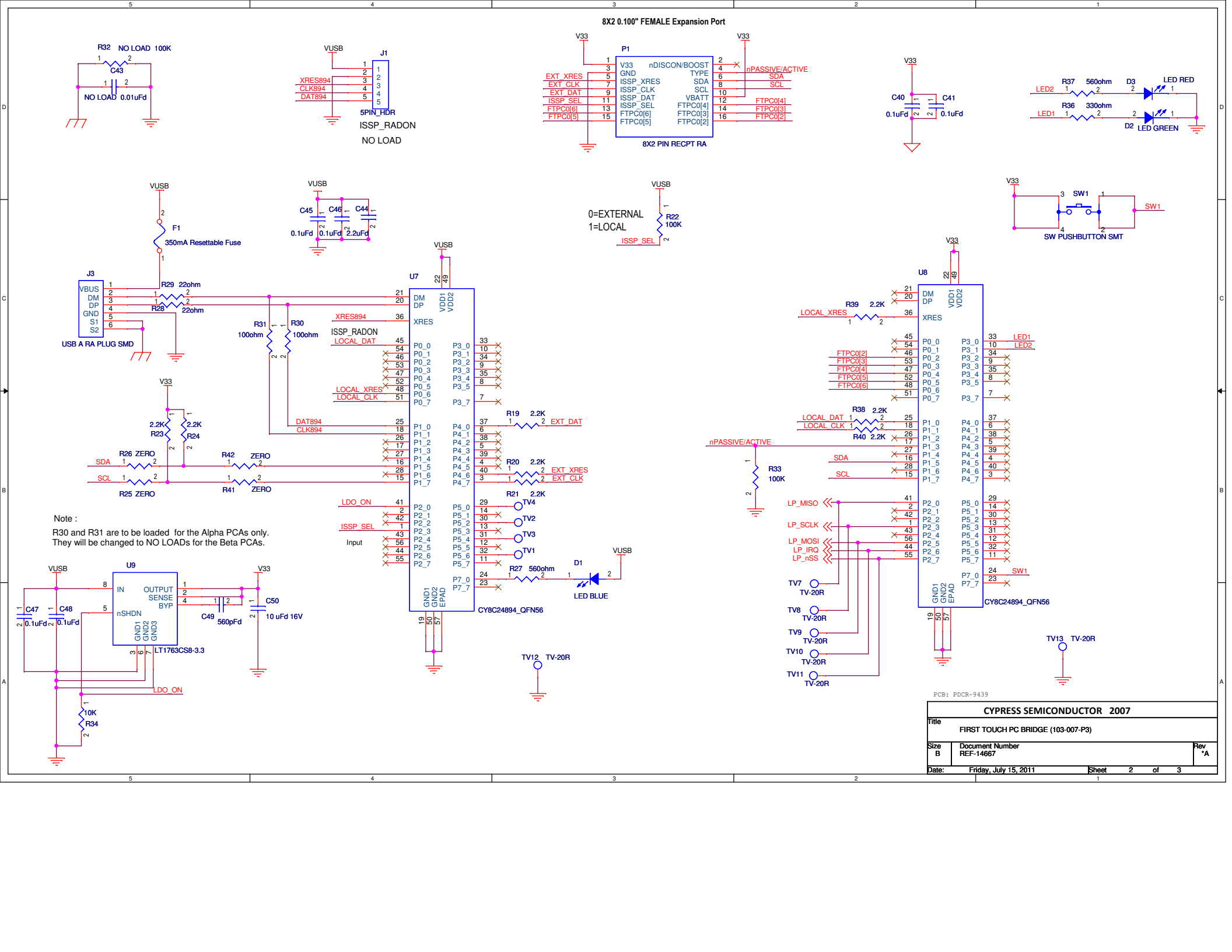
8X2 0.100" FEMALE Expansion Port
R32 NO LOAD 100K
C43
NO LOAD 0.01uFd
VUSB
J1
XRES894
CLK894
DAT894
5PIN_HDR
ISSP_RADON
NO LOAD
V33
P1
V33
GND
ISSP_XRES
ISSP_CLK
ISSP_DAT
ISSP_SEL
FTPC0[6]
FTPC0[5]
nDISCON/BOOST
TYPE
SDA
SCL
VBATT
FTPC0[4]
FTPC0[3]
FTPC0[2]
EXT_XRES
EXT_CLK
EXT_DAT
nPASSIVE/ACTIVE
8X2 PIN RECPT RA
C40
C41
0.1uFd
LED2
R37 560ohm
D3 LED RED
LED1
R36 330ohm
D2 LED GREEN
F1
350mA Resettable Fuse
J3
VBUS
DM
DP
GND
S1
S2
USB A RA PLUG SMD
R29 22ohm
R28 22ohm
C45 0.1uFd
C46 0.1uFd
C44 2.2uFd
R31 100ohm
R30 100ohm
U7
XRES894
ISSP_RADON
LOCAL_DAT
LOCAL_XRES
LOCAL_CLK
DAT894
CLK894
LDO_ON
ISSP_SEL
Input
CY8C24894_QFN56
R23 2.2K
R24 2.2K
R26 ZERO
R25 ZERO
R42 ZERO
R41 ZERO
R19 2.2K
R20 2.2K
R21 2.2K
EXT_DAT
EXT_XRES
EXT_CLK
TV4
TV2
TV3
TV1
TV12 TV-20R
R27 560ohm
D1
LED BLUE
0=EXTERNAL
1=LOCAL
R22 100K
U8
LOCAL_XRES
R39 2.2K
FTPC0[2]
FTPC0[3]
FTPC0[4]
FTPC0[5]
FTPC0[6]
LED1
LED2
R38 2.2K
R40 2.2K
LOCAL_DAT
LOCAL_CLK
nPASSIVE/ACTIVE
R33 100K
SDA
SCL
LP_MISO
LP_SCLK
LP_MOSI
LP_IRQ
LP_nSS
TV7 TV-20R
TV8 TV-20R
TV9 TV-20R
TV10 TV-20R
TV11 TV-20R
TV13 TV-20R
SW1
SW PUSHBUTTON SMT
U9
IN
OUTPUT
SENSE
BYP
nSHDN
LT1763CS8-3.3
C47 0.1uFd
C48 0.1uFd
C49 560pFd
C50 10 uFd 16V
10K
R34
Note :
R30 and R31 are to be loaded for the Alpha PCAs only.
They will be changed to NO LOADs for the Beta PCAs.
PCB: PDCR-9439
CYPRESS SEMICONDUCTOR 2007
Title
FIRST TOUCH PC BRIDGE (103-007-P3)
Size B
Document Number REF-14667
Rev *A
Date: Friday, July 15, 2011
Sheet 2 of 3

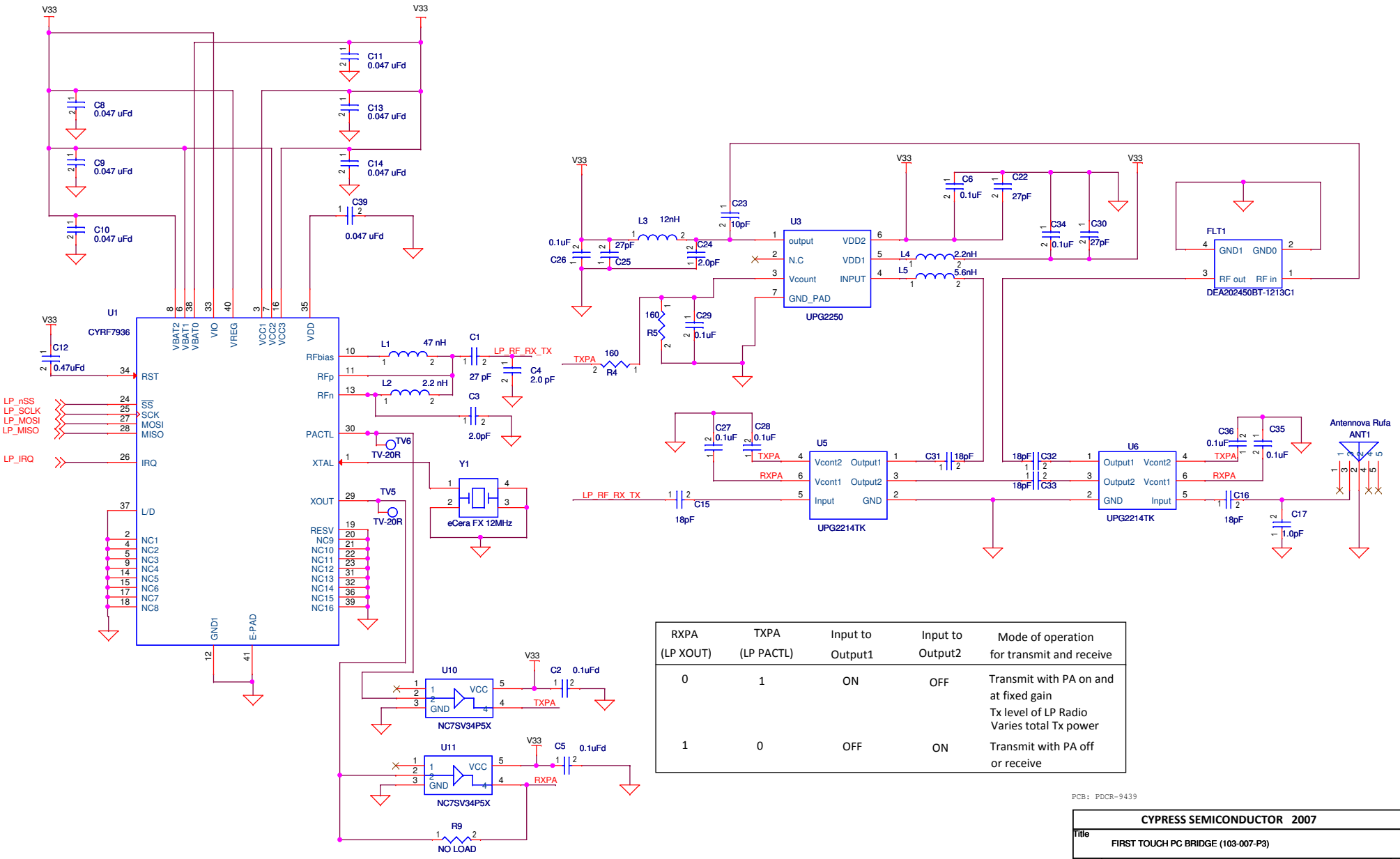

RXPA (LP XOUT)	TXPA (LP PACTL)	Input to Output1	Input to Output2	Mode of operation for transmit and receive
0	1	ON	OFF	Transmit with PA on and at fixed gain Tx level of LP Radio Varies total Tx power
1	0	OFF	ON	Transmit with PA off or receive

PCB: PDCR-9439

CYPRESS SEMICONDUCTOR 2007			
Title: FIRST TOUCH PC BRIDGE (103-007-P3)			
Size: B	Document Number: REF-14667		Rev: *A
Date: Friday, July 15, 2011	Sheet 3 of 3		